Wooden round salt box plan

One of the most common kitchen utensil in each home is somekind of salt keeper, because the salt is basic engredient of most meals. And if you are looking for an original countertop item, this wooden salt box is ideal for you to make. It will give that vintage accent to your table and keep salt moisture free.

The round salt box is one of the easiest salt boxes to make and it is very handy for usage. Its wide opening allows you to grab the salt with big spoon, or simply by hand. Of course, you can make these box for different kinds of spices, or by changing its dimensions, you can easily adjust this sliding lid box for a different purpose.

It will last a lifetime, if you wash it with warm water by hands.

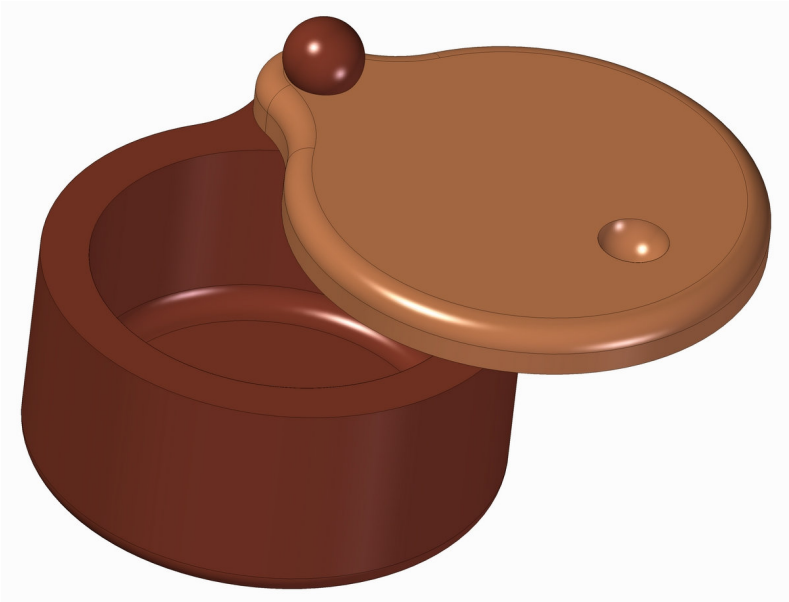

The measurements are given in millimeters, while the measurements given in inches are in brackets (1 inch = 25, 4 mm).

Wooden round salt box plan – Parts list

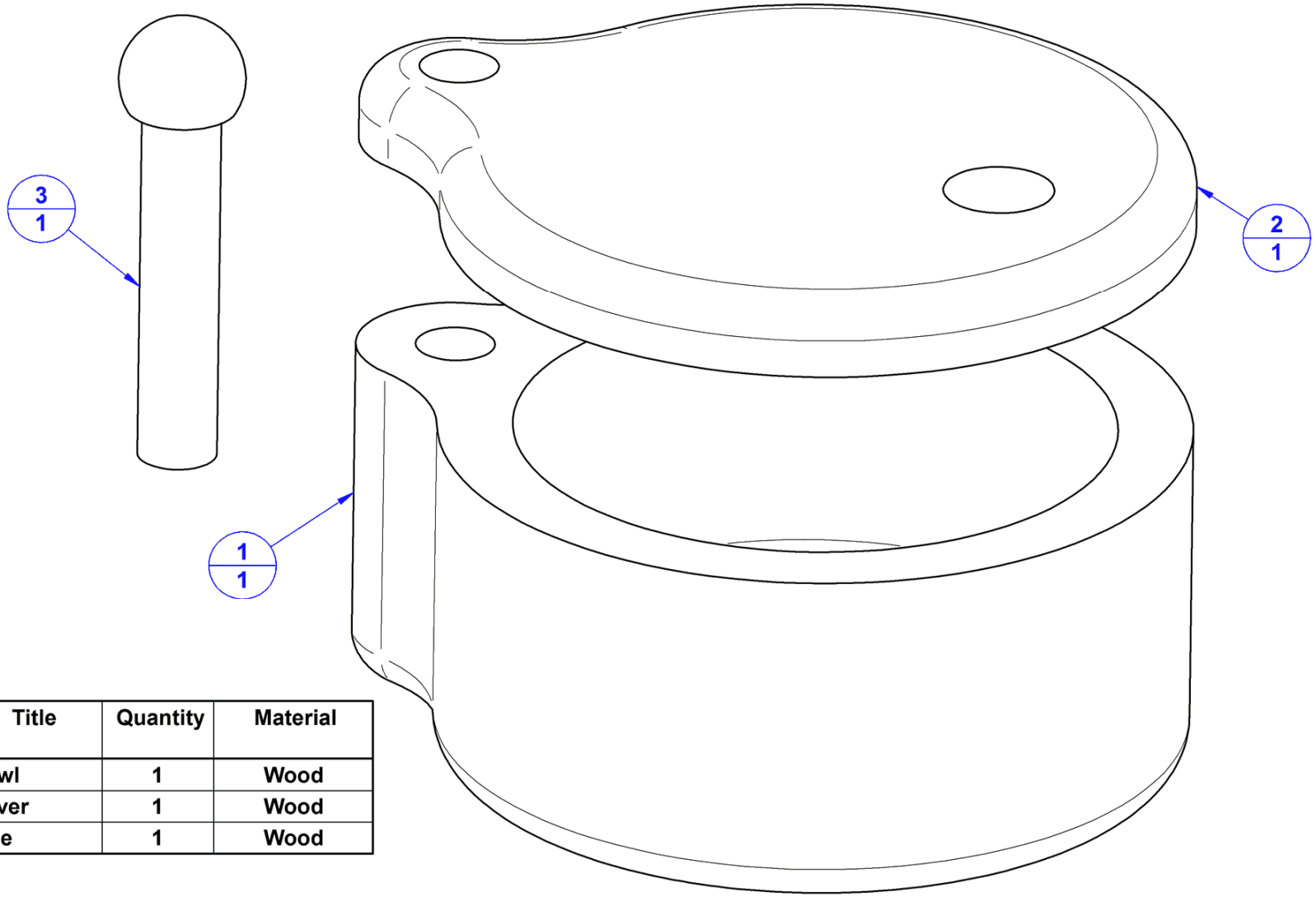

Item Number	Title	Quantity	Material
1	Bowl	1	Wood
2	Cover	1	Wood
3	Axle	1	Wood

Wooden round salt box plan – Assembly 2D drawing

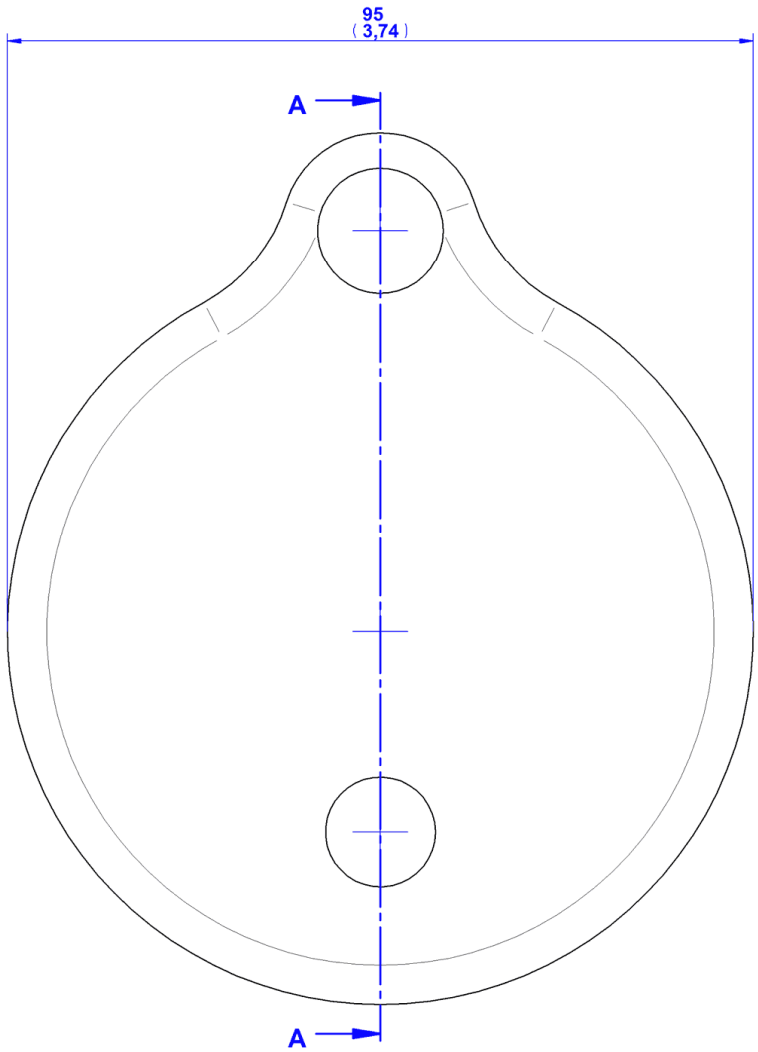

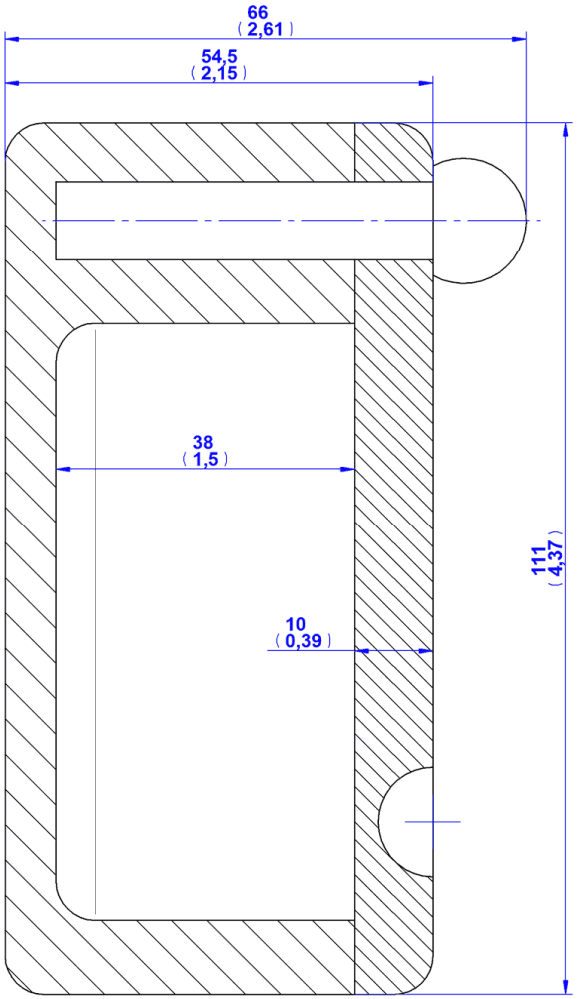

SECTION A-A

1. Bowl

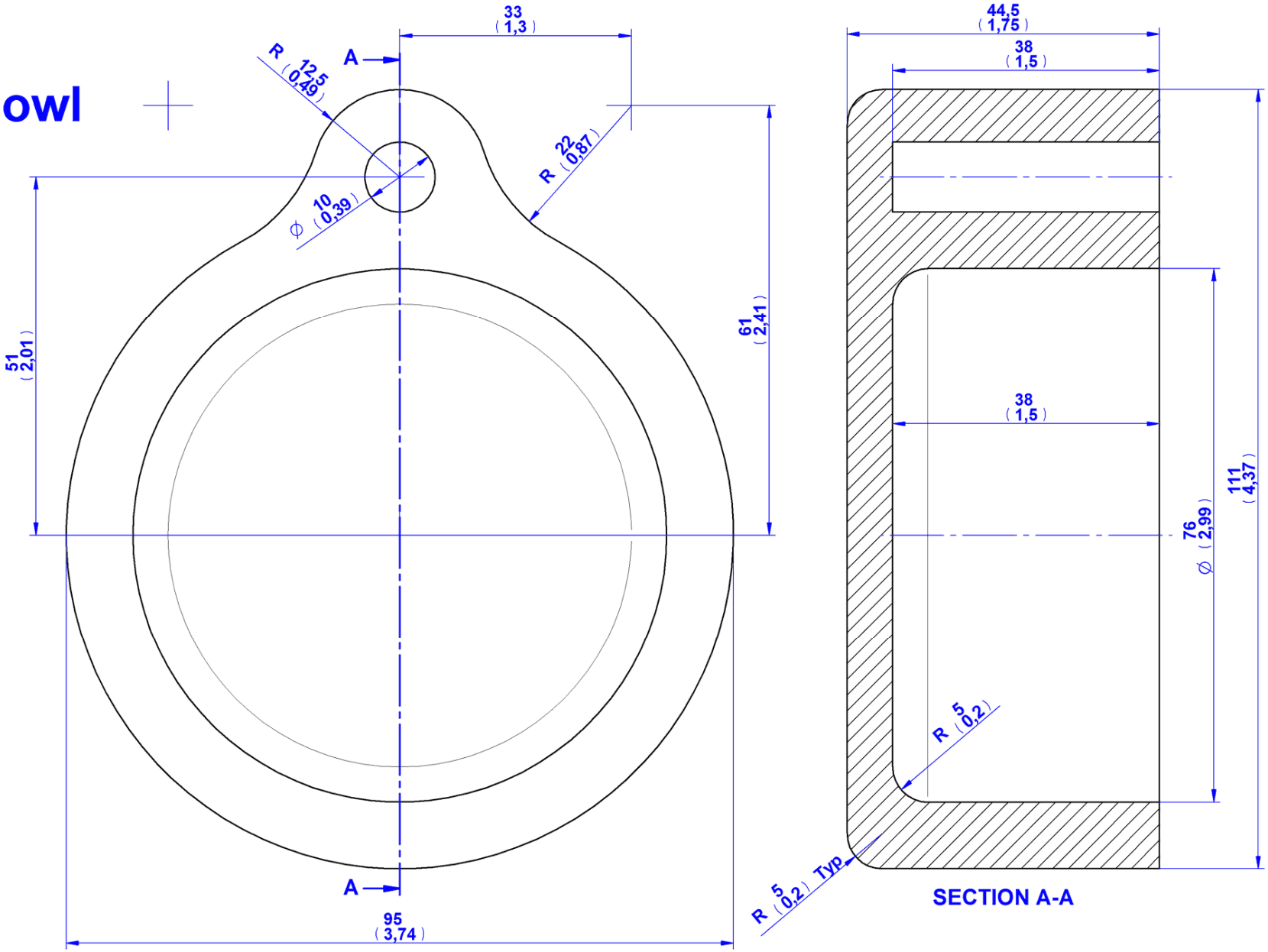
33
(1,3)
A
R 12,5
(0,49)
R 22
(0,87)
∅ 10
(0,39)
51
(2,01)
61
(2,41)
A
95
(3,74)
44,5
(1,75)
38
(1,5)
38
(1,5)
111
(4,37)
∅ 76
(2,99)
R 5
(0,2)
R 5
(0,2) Typ
SECTION A-A

2. Cover

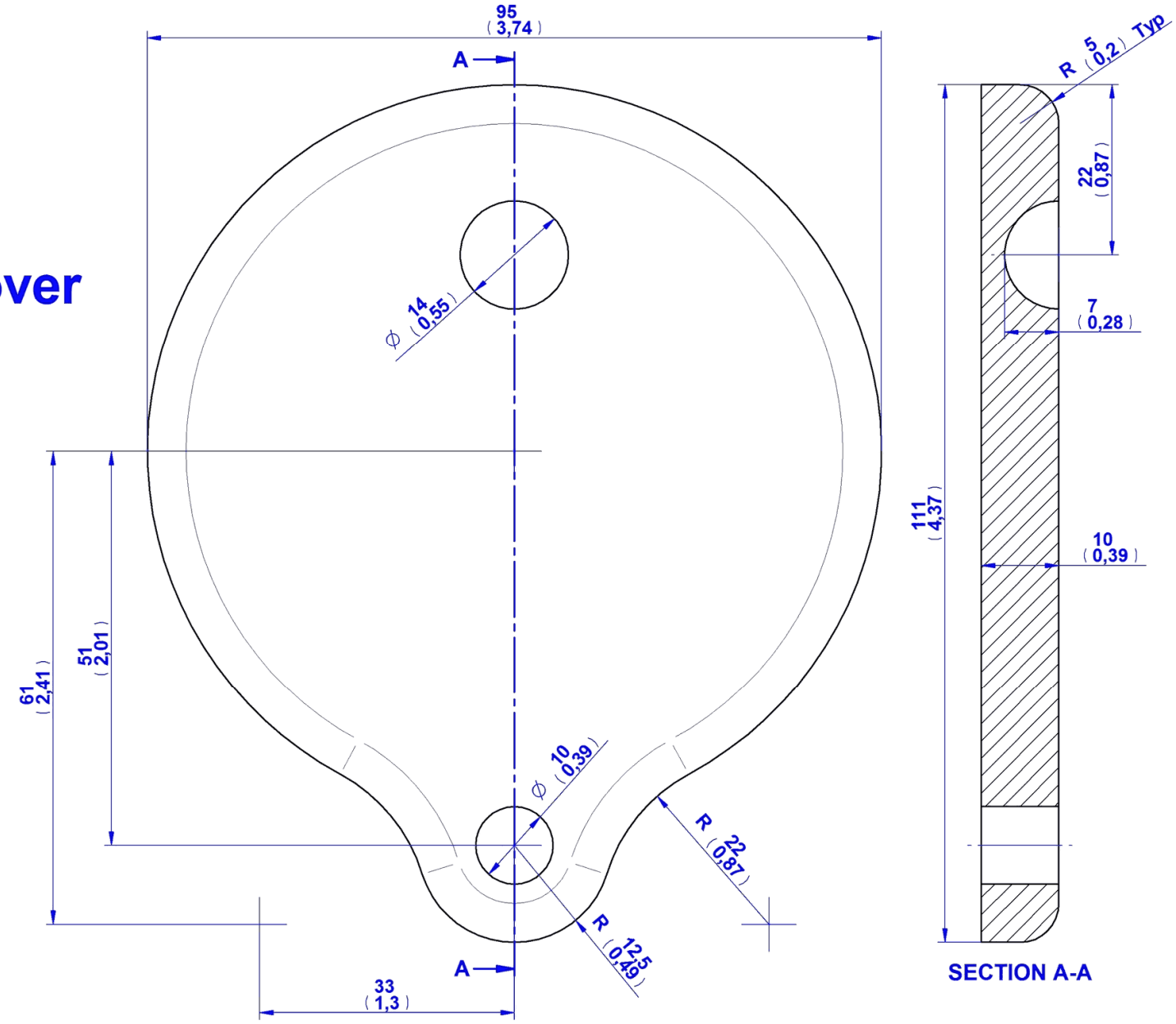
95
(3,74)
A
A
Ø 14 (0,55)
61 (2,41)
51 (2,01)
Ø 10 (0,39)
R 22 (0,87)
R 12,5 (0,49)
33
(1,3)
R 5 (0,2) Typ
22 (0,87)
7 (0,28)
111 (4,37)
10 (0,39)
SECTION A-A

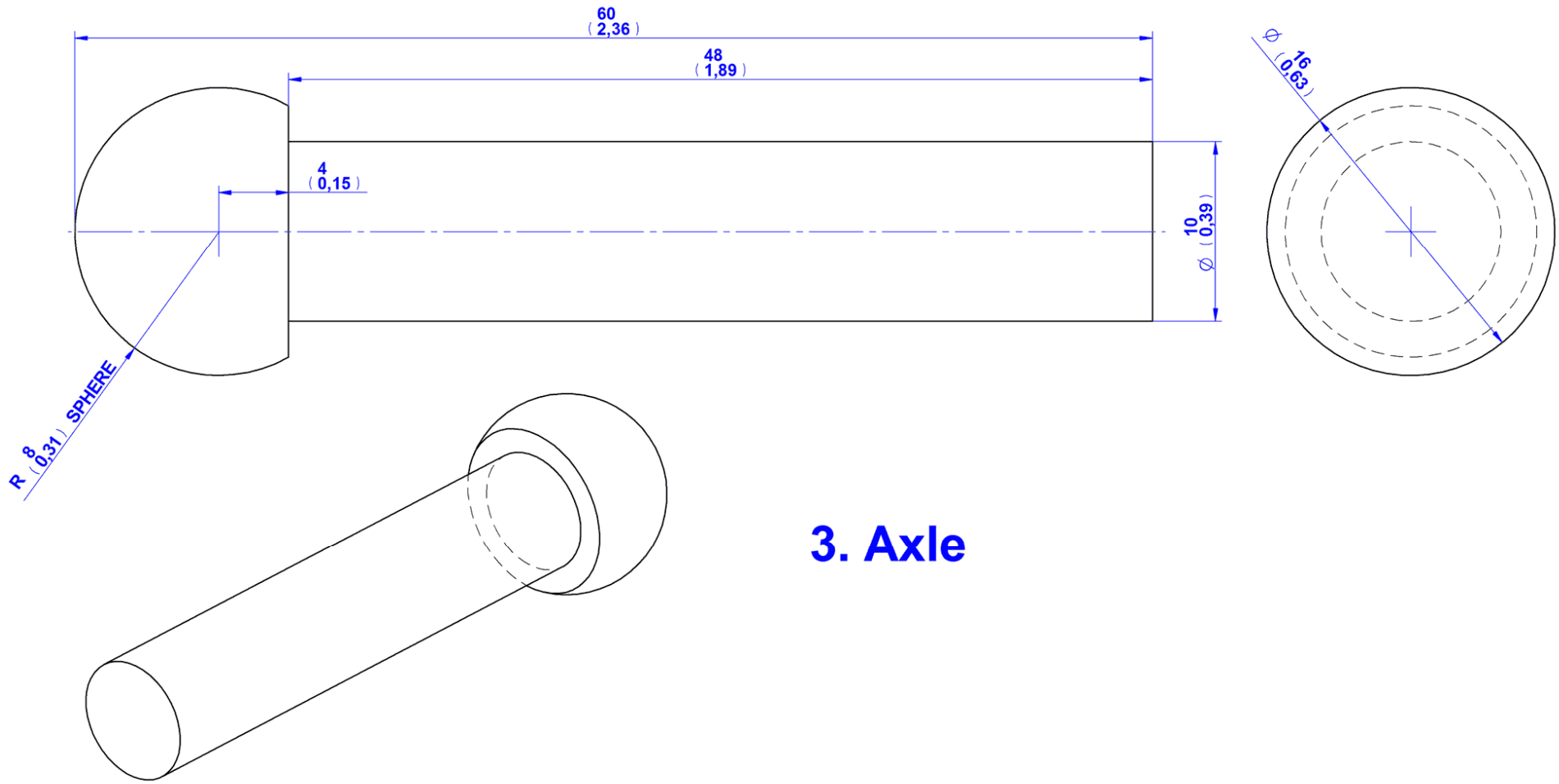

3. Axle

Assemblage instructions
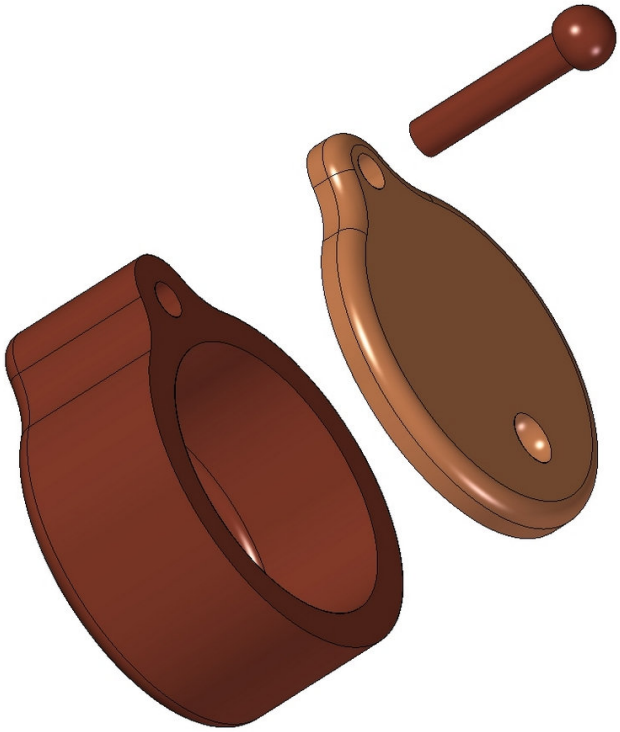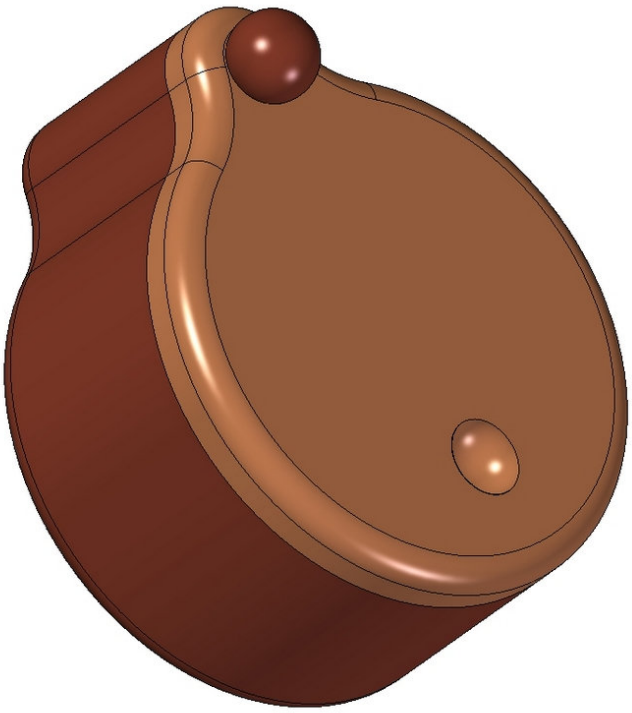
Attach the Cover (part 2) and Axle (Part 3) to the Bowl (part 1) using glue.